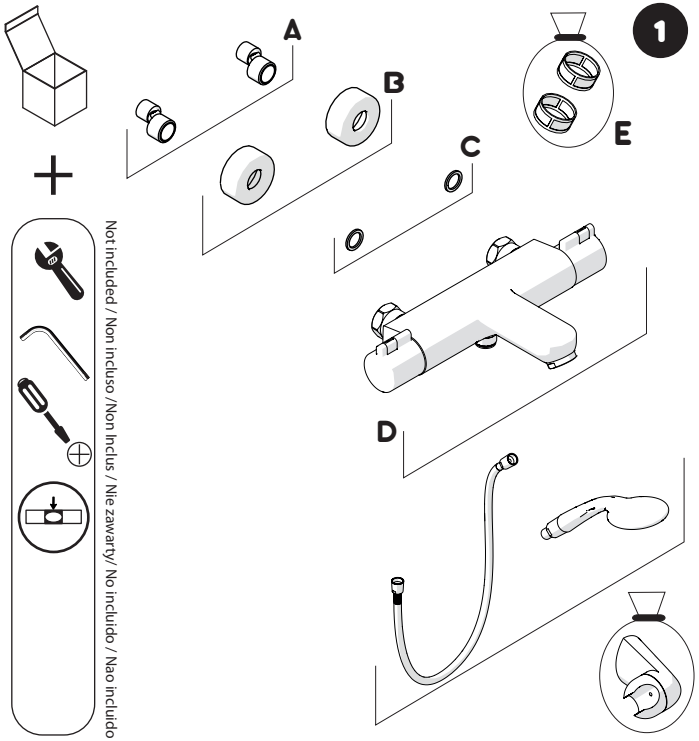
1
A
B
C
D
E
Not included / Non incluso /Non Inclus / Nie zawarty/ No incluido / Nao incluido

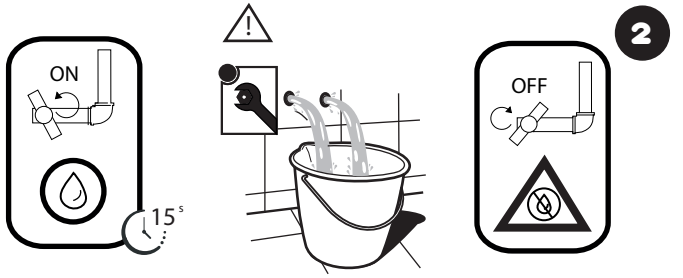
2
ON
15 s
OFF

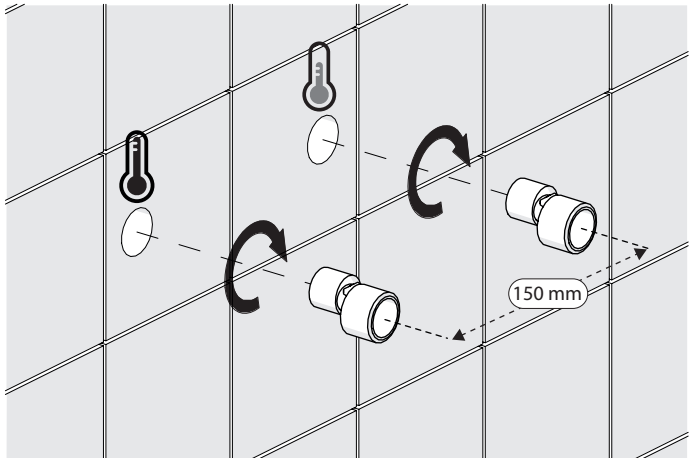
150 mm

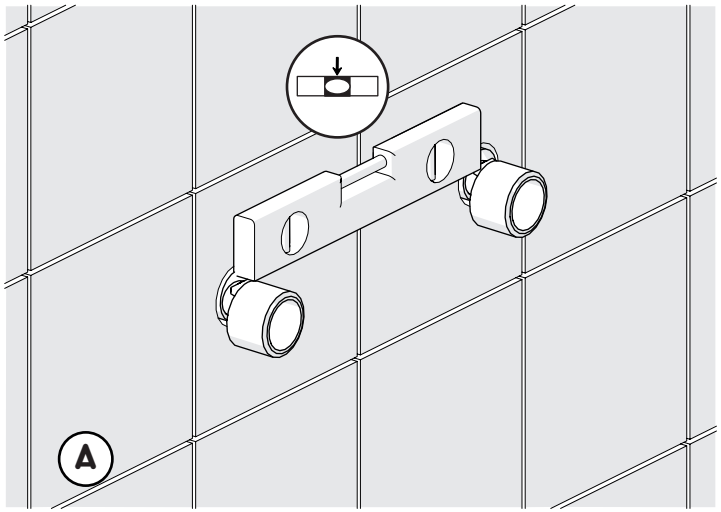
3
A

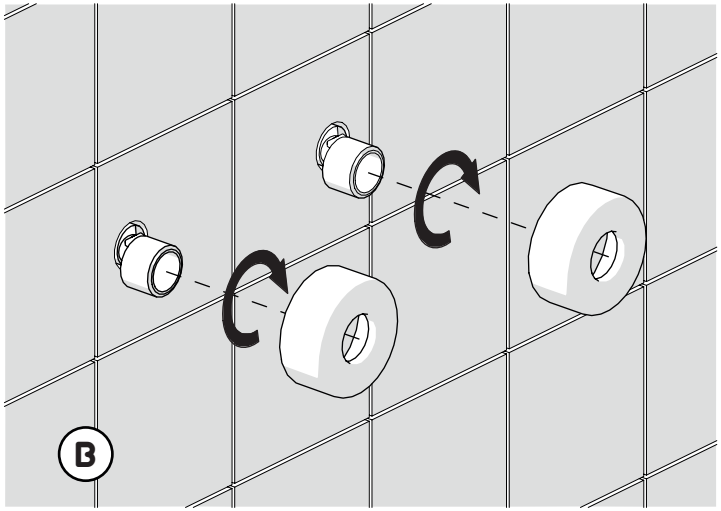
4
B

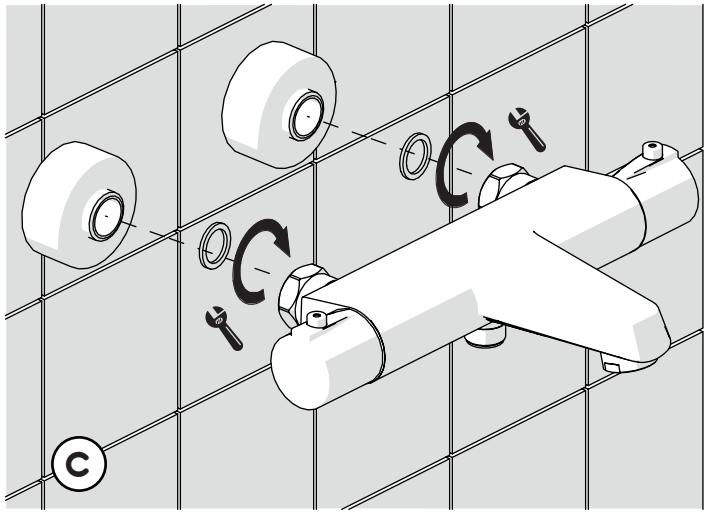
5
C

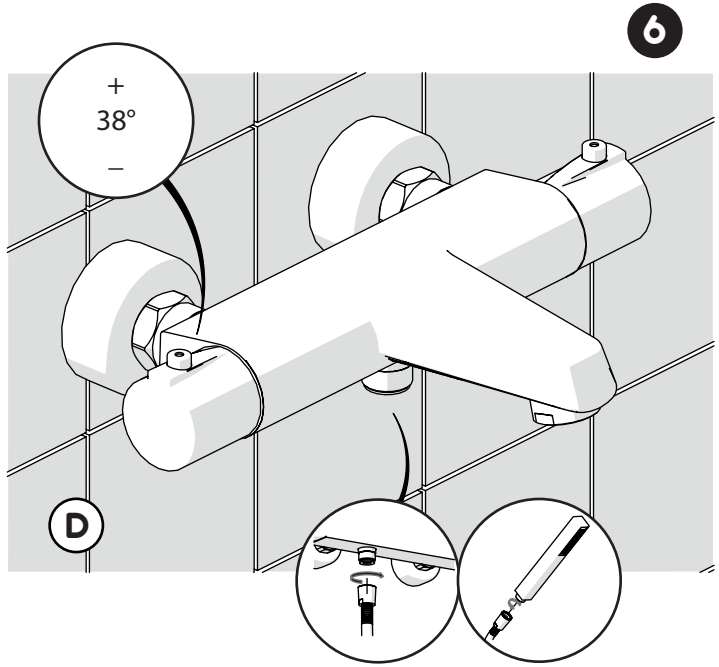
6
+
38°
–
D

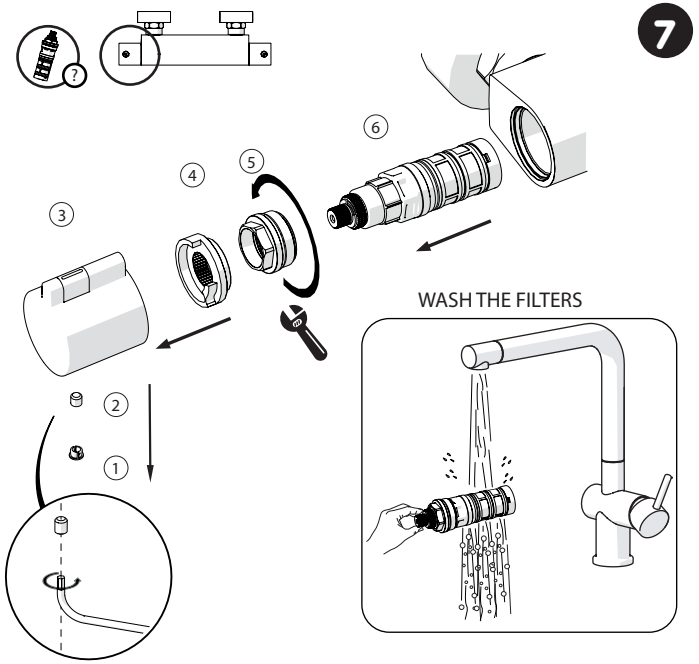

CHANGE FILTERS (spare into the box)

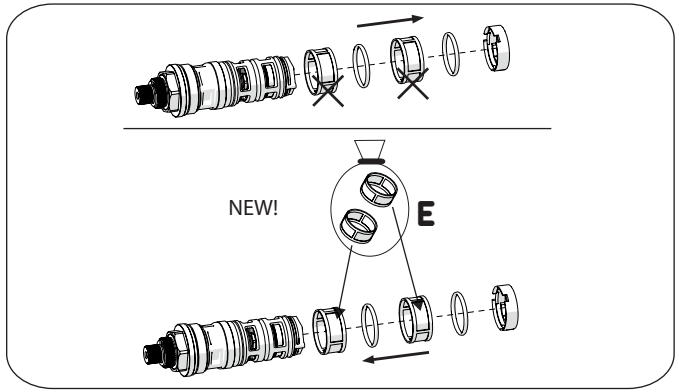

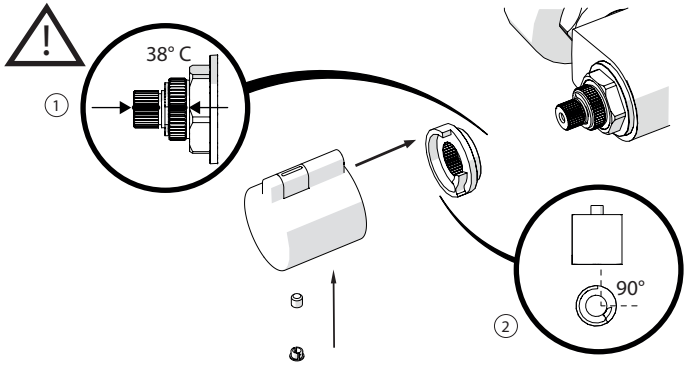

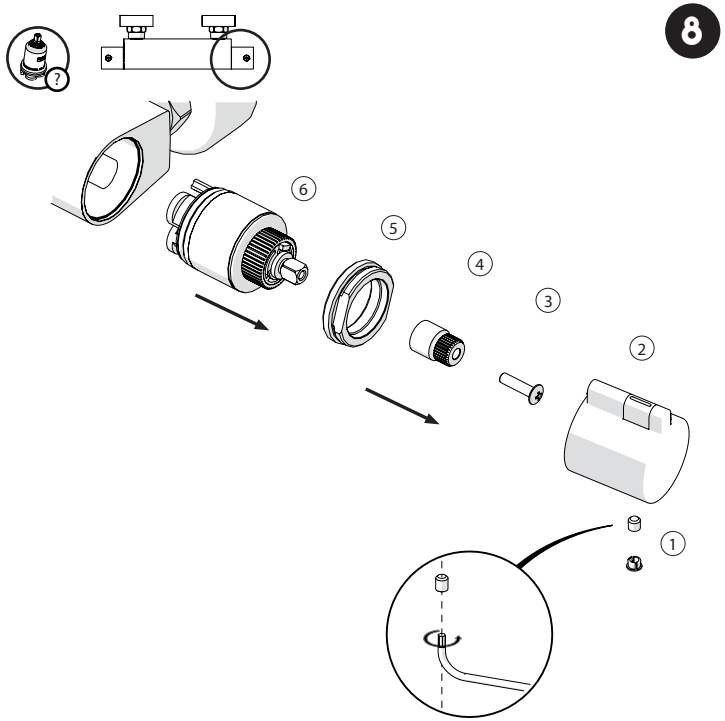

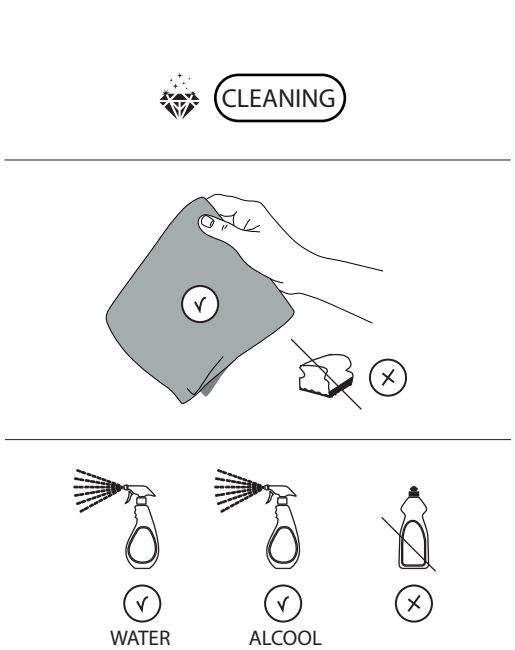

NOBILI®
The Best Technology for Water

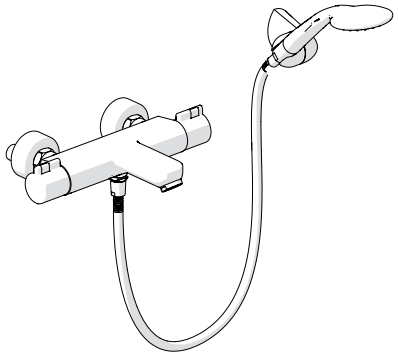

AB87010

AB87010/1

www.grupponobili.it

IISTRAB87010#---STD
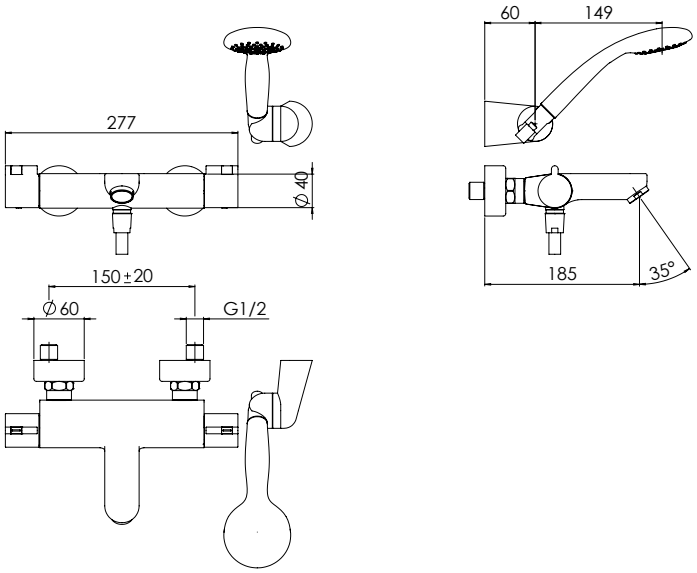
REV1.01/2014